REVISIONS				
REV.	DESCRIPTION	ECN	DATE	APPROVED
E	REFER TO ECN	12864	9/8/14	JJ

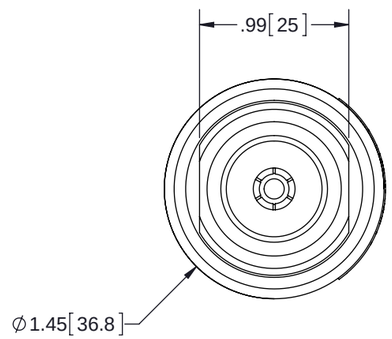

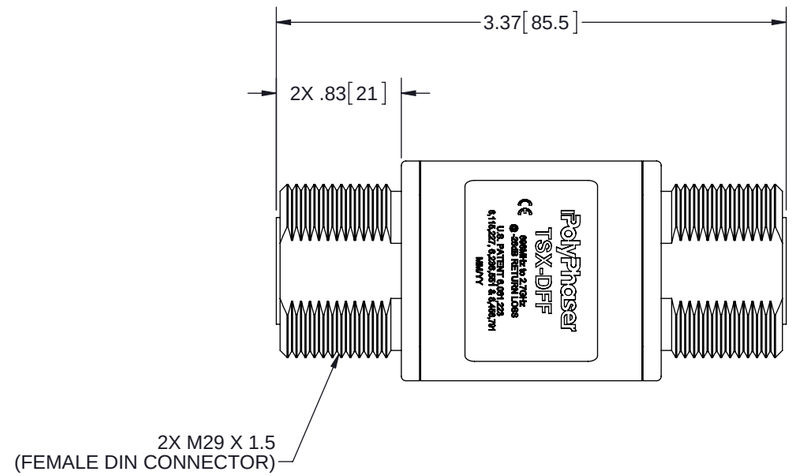

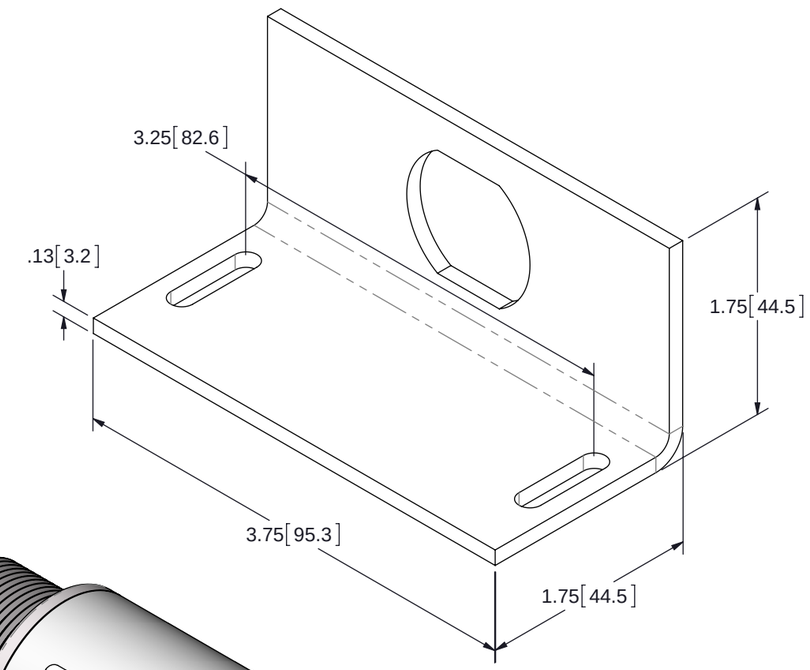

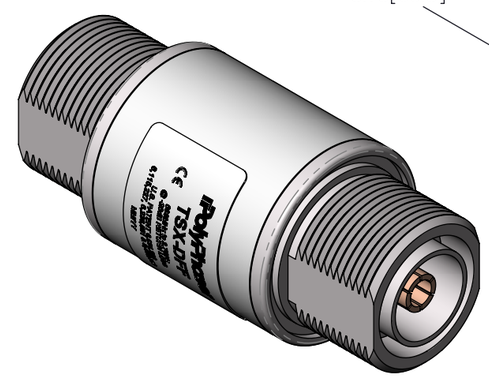

MAXIMUM CHARACTERISTICS

APPLICATION:
DC SHORT/RF ONLY (NO POWER SUPPLY PROVISIONS)
BULKHEAD MOUNT BI-DIRECTIONAL
WEATHERPROOF WHEN INSTALLED
FREQUENCY RANGE:
698MHz TO 2.7GHz @ -26dB RETURN LOSS
MAX SURGE:
IEC 61000-4-5 8/20Õs WAVEFORM
40kA MAX
20kA MULTIPLE
INSERTION LOSS:
Ó0.1dB
CONTINUOUS POWER:
500W @ 920MHz
(750W @ 50°C)
MAX PEAK INSTANTANEOUS POWER (PIP):
27kW
LET THROUGH VOLTAGE:
Ó±200mV FOR 3kA @ 8/20Õs WAVEFORM
THROUGHPUT ENERGY:
Ó5nJ FOR 3kA @ 8/20Õs WAVEFORM
PIM 3rd ORDER:
<-155dBc (-112dBm); 2 X 20W INPUT
TEMPERATURE:
-50°C TO +85°C STORAGE/OPERATING
VIBRATION:
1G @ 5Hz TO 100Hz
MATERIAL:
BODY: TRI-M3Ê PLATING OVER BRASS
PTFE: DIELECTRIC
CENTER PINS: TRI-METAL
ENVIRONMENTAL:
MEETS IEC 60529 IP67 WHEN CONNECTED
MEETS BELLCORE #TA-NWT-000487
PROCEDURE 4.11, WIND DRIVEN (120MPH)
RAIN INTRUSION TEST
CE COMPLIANT
RoHS COMPLIANT

HARDWARE KITS INCLUDE:

QTY	DESCRIPTION
2	WASHER 10 EXT TOOTH SS STAINLESS STEEL
2	NUT 10-32 HEX 18-8 SS
2	10-32 x 3/4" RD HD SLOTTED SCREW SS
1	NUT M29 X 1.5 SST DIN
1	WASHER 1.15ID FLAT SST TYPE 304
1	O-RING 025 SILICONE

CUSTOMER APPROVAL: _____ DATE: _____

ALL DIMENSIONS SHOWN ARE FOR REFERENCE ONLY.

THESE COMMODITIES, TECHNOLOGY OR SOFTWARE WERE EXPORTED FROM THE UNITED STATES IN ACCORDANCE WITH THE EXPORT ADMINISTRATION REGULATIONS. DIVERSION CONTRARY TO U.S. LAW PROHIBITED.

UNLESS OTHERWISE SPECIFIED
LEADING DIMENSIONS ARE INCHES
DIMENSIONS IN [ ] ARE MILLIMETERS

TOLERANCES:
FRACTIONS=Ñ 1/32 .XX=Ñ .01
ANGLES=Ñ 1 Á .XXX=Ñ .005

MATERIAL
NA
.

THIRD-ANGLE PROJECTION

DRAWN	HMB	4/1/10
ENG APPD	JS	4/20/10
PRODUCT MGR	CAP	4/20/10
MARKETING APPD	LJ	4/21/10
PROJECT NO.	.	

NOTICE: THE INFORMATION AND DESIGN IN THIS DOCUMENT IS THE PROPERTY OF TRANSTECTOR SYSTEMS. ALL RIGHTS RESERVED.

PolyPhaser

TITLE
DC SHORT 698MHZ-2.7GHZ DIN FEM /FEM SURGE FILTER W/MOUNT BRKT
CUSTOMER SPECIFICATION

SIZE	CAGE	PART NUMBER	REV
B	30992	TSX-DFF-BF	E

SCALE	PROD CAT	DOCUMENT NAME	SHEET	OF
1:1	RFP	TSX-DFF-BF-C	3	3

É 2014 Smiths Power. All rights reserved.